Flail Mower Assembly

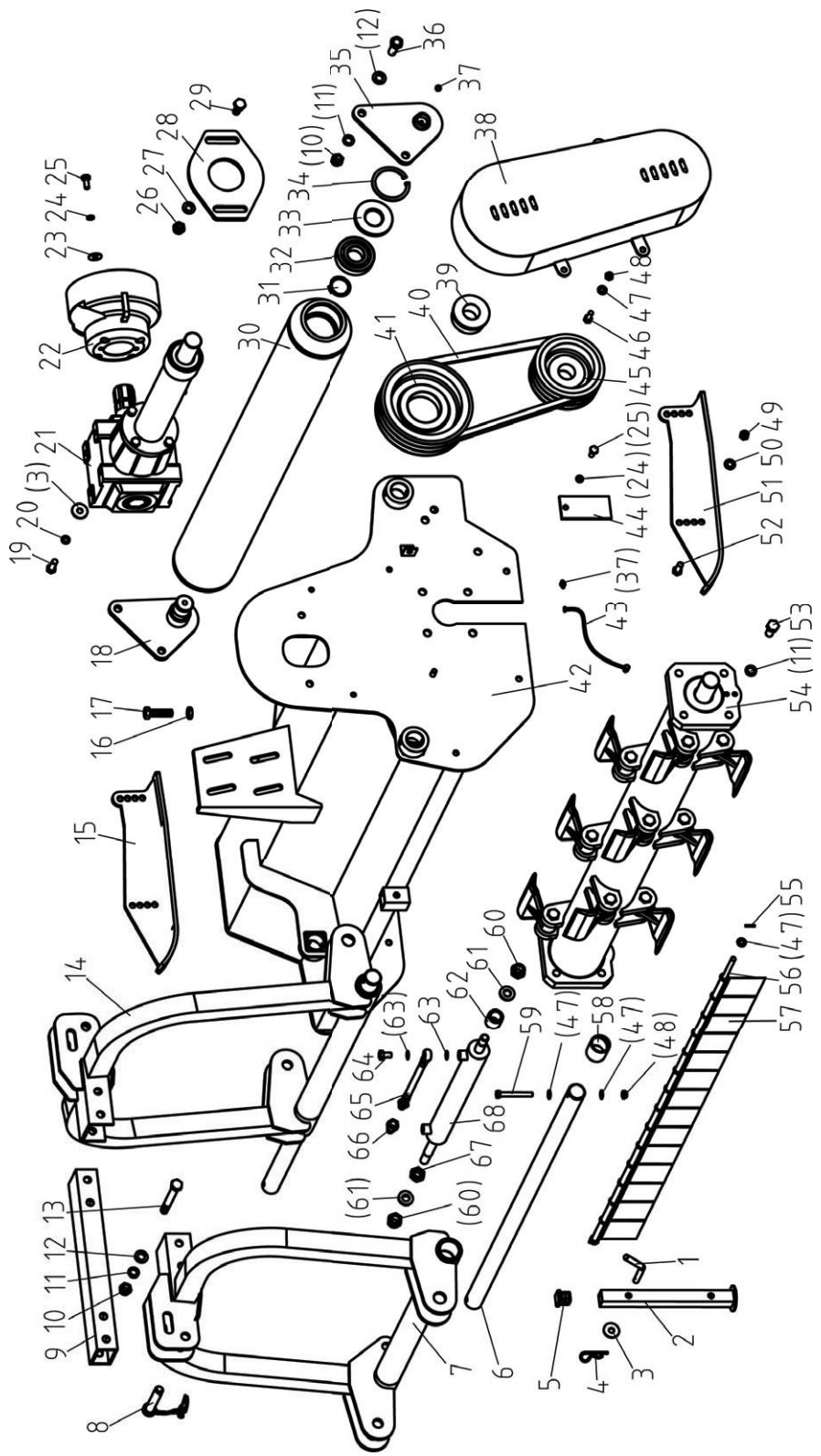

CHAPTER 7. PARTS LIST - AG MODEL

Flail Mower Assembly

NO.	Part NO.				Name & Specifications	QTY
	AG-140	AG-170	AG-200	AG-220		
1	EF100.00.111	EF100.00.111	EF100.00.111	EF100.00.111	Bent pin	1
2	EFAG140.015	EFAG140.015	EFAG140.015	EFAG140.015	Supporting frame	1
3	GB96-85	GB96-85	GB96-85	GB96-85	Plain washer 12	5
4					R pin	1
5	EF100.00.117	EF100.00.117	EF100.00.117	EF100.00.117	Cover	1
6	EFAG140.104	EFAG140.104	EFAG140.104	EFAG140.104	Guide rail	2
7	EFAG140.011	EFAG140.011	EFAG140.011	EFAG140.011	Hanging weldment (B)	1
8	EF100.00.019	EF100.00.019	EF100.00.019	EF100.00.019	Pin shaft weldment	1
9	EFAG140.110	EFAG140.110	EFAG140.110	EFAG140.110	Connecting tube	1
10	GB6184-86	GB6184-86	GB6184-86	GB6184-86	Locking nut M16	20
11	GB93-87	GB93-87	GB93-87	GB93-87	Spring washer 16	28
12	GB97.1-85	GB97.1-85	GB97.1-85	GB97.1-85	Plain washer 16	12
13	GB5782-86	GB5782-86	GB5782-86	GB5782-86	Bolt M16X130	4
14	EFAG140.018	EFAG140.018	EFAG140.018	EFAG140.018	Hanging weldment (F)	1
15	EFGC120.013	EFGC120.013	EFGC120.013	EFGC120.013	Base plate (L)	1
16	GB6173-86	GB6173-86	GB6173-86	GB6173-86	Nut M16x1.5	1
17	GB5786-86	GB5786-86	GB5786-86	GB5786-86	Bolt M16X1.5X55	1
18	EFAG140.020	EFAG140.020	EFAG140.020	EFAG140.020	Supporting for roller (L)	1
19	GB5783-86	GB5783-86	GB5783-86	GB5783-86	Bolt M12X35	4
20	GB93-87	GB93-87	GB93-87	GB93-87	Spring washer 12	4
21	EFAG140.021	EFAG140.021	EFAG140.021	EFAG140.021	Gear box assembly	1
22	EF100.00.112	EF100.00.112	EF100.00.112	EF100.00.112	Guard shade	2
23	GB96-85	GB96-85	GB96-85	GB96-85	Plain washer 10	8
24	GB93-87	GB93-87	GB93-87	GB93-87	Spring washer 10	9
25	GB5783-86	GB5783-86	GB5783-86	GB5783-86	Bolt M10X25	9
26	GB6184-86	GB6184-86	GB6184-86	GB6184-86	Locking nut M14	2
27	GB97.1-85	GB97.1-85	GB97.1-85	GB97.1-85	Plain washer 14	2
28	EFAG140.108	EFAG140.108	EFAG140.108	EFAG140.108	Adjusting plate	1
29	GB5783-86	GB5783-86	GB5783-86	GB5783-86	Bolt M14X35	2
30	EFAG140.017	EFAG140.017	EFAG140.017	EFAG140.017	Roller weldment	1
31	GB894.1-86	GB894.1-86	GB894.1-86	GB894.1-86	Circlip 40	2
32	GB/T276-94	GB/T276-94	GB/T276-94	GB/T276-94	Bearing 6308	2
33	GB13871-94	GB13871-94	GB13871-94	GB13871-94	Oil seal 40X90X10	3
34	GB893.1-86	GB893.1-86	GB893.1-86	GB893.1-86	Circlip 90	4
35	EFAG140.022	EFAG140.022	EFAG140.022	EFAG140.022	Supporting for roller (R)	1
36	GB5783-86	GB5783-86	GB5783-86	GB5783-86	Bolt M16X45	4
37	GB1152-89	GB1152-89	GB1152-89	GB1152-89	Oil cup M10X1	4
38	EFAG140.012	EFAG140.012	EFAG140.012	EFAG140.012	Belt cover	1
39	JB/T7934Z3	JB/T7934Z3	JB/T7934Z3	JB/T7934Z3	Swellable sleeve	2
40	GB/T1154-97	GB/T1154-97	GB/T1154-97	GB/T1154-97	Strap B1280(B51)	3

Flail Mower Assembly

NO.	Part NO.				Name & Specifications	QTY
	AG-140	AG-170	AG-200	AG-220		
41	EFAG140.109	EFAG140.109	EFAG140.109	EFAG140.109	Big belt ptlley	1
42	EFAG140.013	EFAG140.013	EFAG140.013	EFAG140.013	The cover weldment	1
43					Union elbow M10X1	1
44	EFAG140.106	EFAG140.106	EFAG140.106	EFAG140.106	Fender	1
45	EFAG140.107	EFAG140.107	EFAG140.107	EFAG140.107	Small belt ptlley	1
46	GB5783-86	GB5783-86	GB5783-86	GB5783-86	Bolt M10X30	2
47	GB97.1-85	GB97.1-85	GB97.1-85	GB97.1-85	Plain washer 10	25
48	GB6184-86	GB6184-86	GB6184-86	GB6184-86	Locking nut M10	4
49	GB6184-86	GB6184-86	GB6184-86	GB6184-86	Locking nut M12	4
50	GB97.1-85	GB97.1-85	GB97.1-85	GB97.1-85	Plain washer 12	4
51	EFGC120.014	EFGC120.014	EFGC120.014	EFGC120.014	Base plate (R)	1
52	GB5783-86	GB5783-86	GB5783-86	GB5783-86	Bolt M12X30	4
53	GB5783-86	GB5783-86	GB5783-86	GB5783-86	Bolt M16X35	8
54					Blade axle subassembly	1
55	GB879-86	GB879-86	GB879-86	GB879-86	Elastic cylindrical pin 4x22	2
56	EFAG140.101	EFAG140.101	EFAG140.101	EFAG140.101	Shaft for fender	1
57	EF100.00.122	EF100.00.122	EF100.00.122	EF100.00.122	Fender (W)	14
58	EFAG140.105	EFAG140.105	EFAG140.105	EFAG140.105	Bushing	4
59	GB5783-86	GB5783-86	GB5783-86	GB5783-86	Bolt M10X80	4
60	GB6184-86	GB6184-86	GB6184-86	GB6184-86	Locking nut M18X1.5	2
61	GB97.1-85	GB97.1-85	GB97.1-85	GB97.1-85	Plain washer 18	2
62	EFGCH120.101	EFGCH120.101	EFGCH120.101	EFGCH120.101	Sleeve	1
63	GB3451-86	GB3451-86	GB3451-86	GB3451-86	Washer 12	4
64	GB3451-83	GB3451-83	GB3451-83	GB3451-83	Bolt M12X1.25	2
65	EFGCH120.011	EFGCH120.011	EFGCH120.011	EFGCH120.011	Oil pipe	2
66					Quick connector R1/2"	2
67	GB6173-86	GB6173-86	GB6173-86	GB6173-86	Nut M18X1.5	1
68	EFAG140.016	EFAG140.016	EFAG140.016	EFAG140.016	Slippage cylinder	1

CHAPTER 7. PARTS LIST - AG MODEL

Blade Axle Subassembly

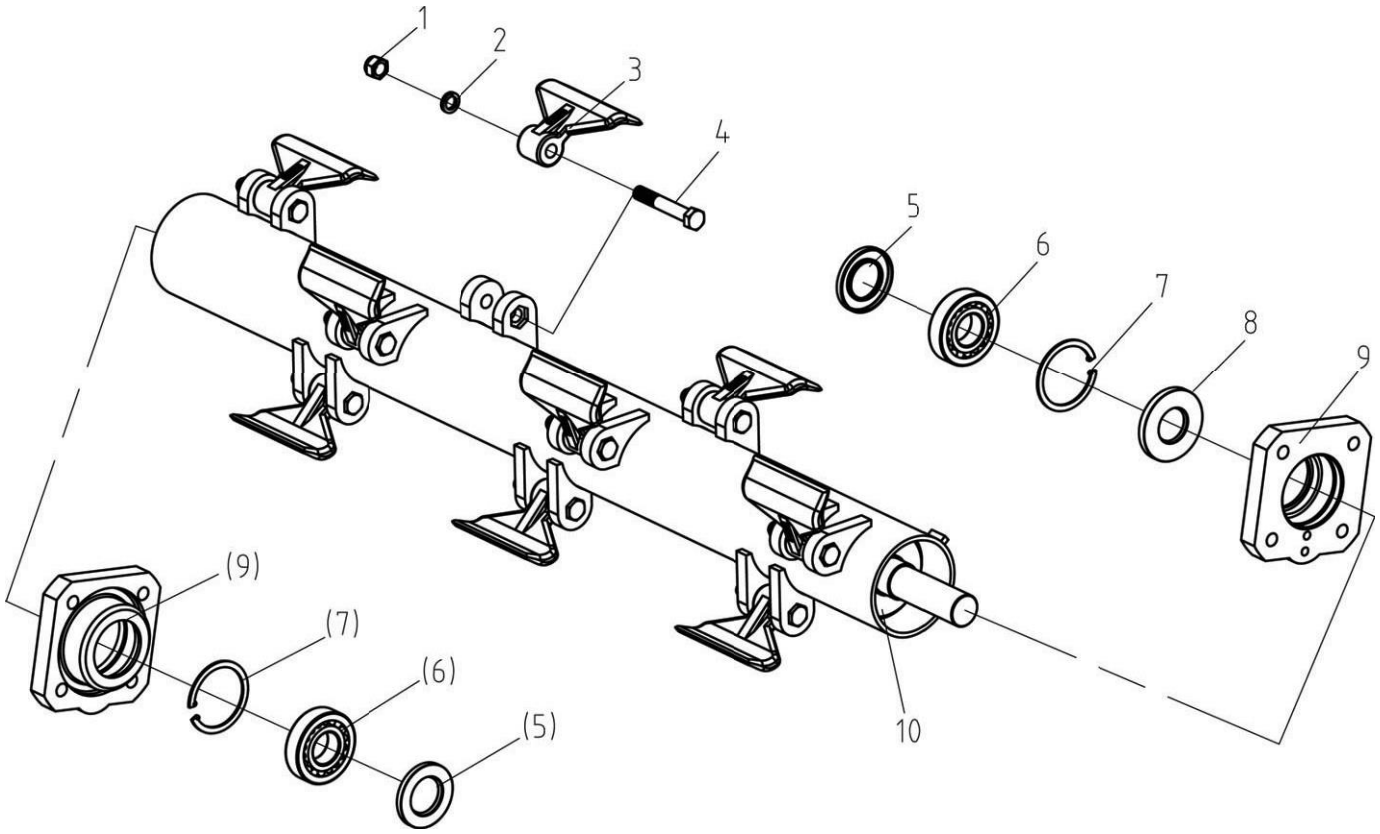

NO.	Part NO.				Name & Specifications	QTY
	AG-140	AG-170	AG-200	AG-220		
1	GB6184-86	GB6184-86	GB6184-86	GB6184-86	Locking nut M16	12
2	GB93-87	GB93-87	GB93-87	GB93-87	Spring washer 16	12
3	EFAG140.103	EFAG140.103	EFAG140.103	EFAG140.103	Hoe	12
4	GB5782-86	GB5782-86	GB5782-86	GB5782-86	Bolt M12x80	12
5	GB13871-94	GB13871-94	GB13871-94	GB13871-94	Oil seal 45X80X10	2
6	GB/T281-94	GB/T281-94	GB/T281-94	GB/T281-94	Bearing1308	2
7	GB893.1-86	GB893.1-86	GB893.1-86	GB893.1-86	Circlip 90	2
8	GB13871-94	GB13871-94	GB13871-94	GB13871-94	Oil seal 40X90X10	1
9	EFAG140.102	EFAG140.102	EFAG140.102	EFAG140.102	Bearing seat	2
10	EFAG140.019	EFAG170.019	EFAG200.019	EFAG220.019	Blade axle weldment	1

CHAPTER 7. PARTS LIST - AG MODEL

Gearbox Assembly

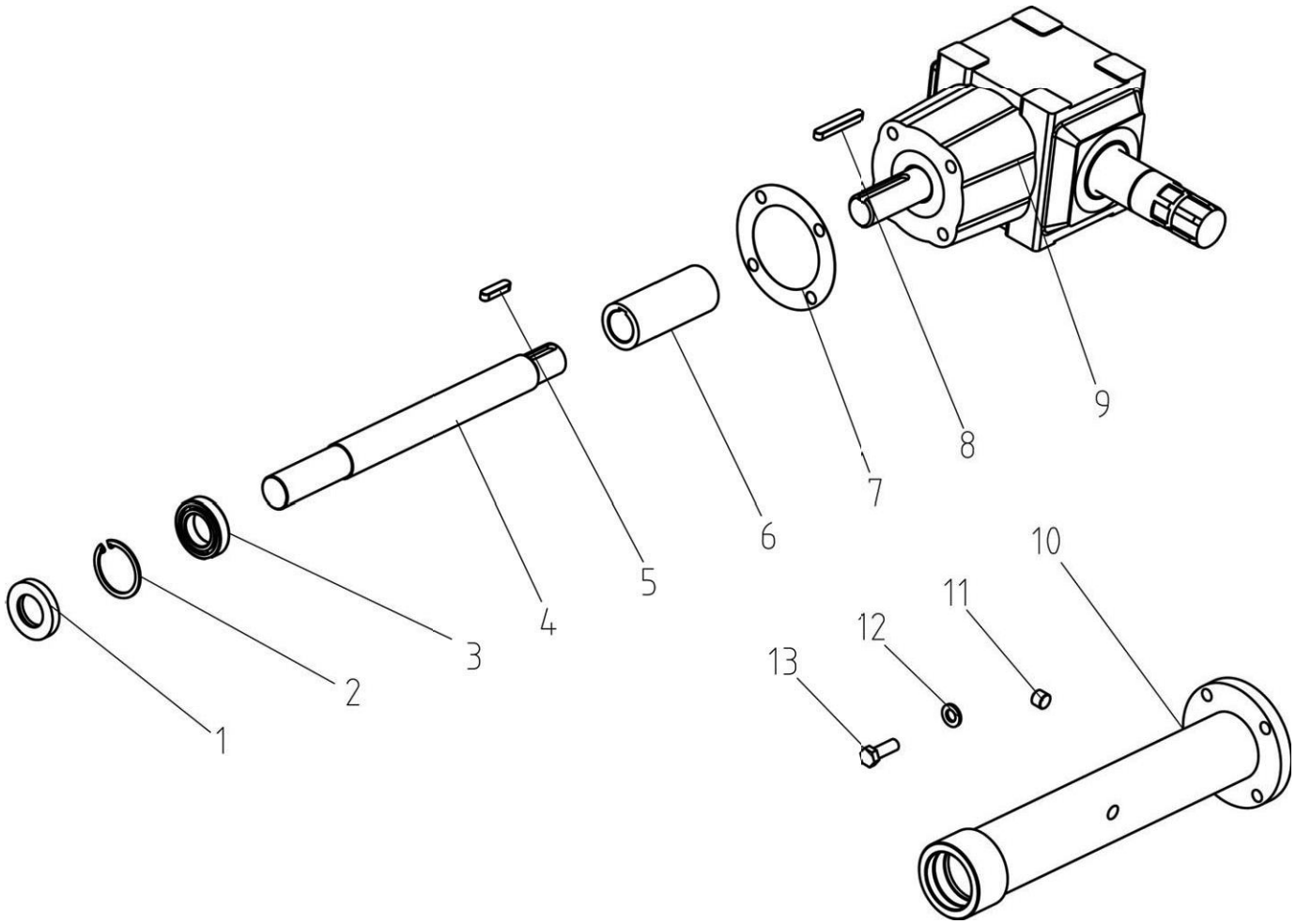

NO.	Part NO.				Name & Specifications	QTY
	AG-140	AG-170	AG-200	AG-220		
1	GB13871-94	GB13871-94	GB13871-94	GB13871-94	Oil seal FB40X68X10	1
2	GB893.1-86	GB893.1-86	GB893.1-86	GB893.1-86	Circlip 68	1
3	GB/T276-94	GB/T276-94	GB/T276-94	GB/T276-94	Bearing 6008	1
4	EFAG140.166	EFAG140.166	EFAG140.166	EFAG140.166	Shaft	1
5	GB1096-79	GB1096-79	GB1096-79	GB1096-79	Key A10X40	1
6	EFGC120.132	EFGC120.132	EFGC120.132	EFGC120.132	Connected sleeve	1
7	EFGC120.131	EFGC120.131	EFGC120.131	EFGC120.131	Paper gasket	1
8	GB1096-79	GB1096-79	GB1096-79	GB1096-79	Key A10X70	1
9	XH50.003Z.01	XH50.003Z.01	XH50.003Z.01	XH50.003Z.01	Gearbox assembly	1
10	EFAG140.026	EFAG140.026	EFAG140.026	EFAG140.026	Shaft tube weldment	1
11	ZBT 32001.3-87	ZBT 32001.3-87	ZBT 32001.3-87	ZBT 32001.3-87	Retainer ZG3/8"-19	2
12	GB93-87	GB93-87	GB93-87	GB93-87	Plain washer 12	4
13	GB5783-86	GB5783-86	GB5783-86	GB5783-86	Hex. head bolt M12X35	4